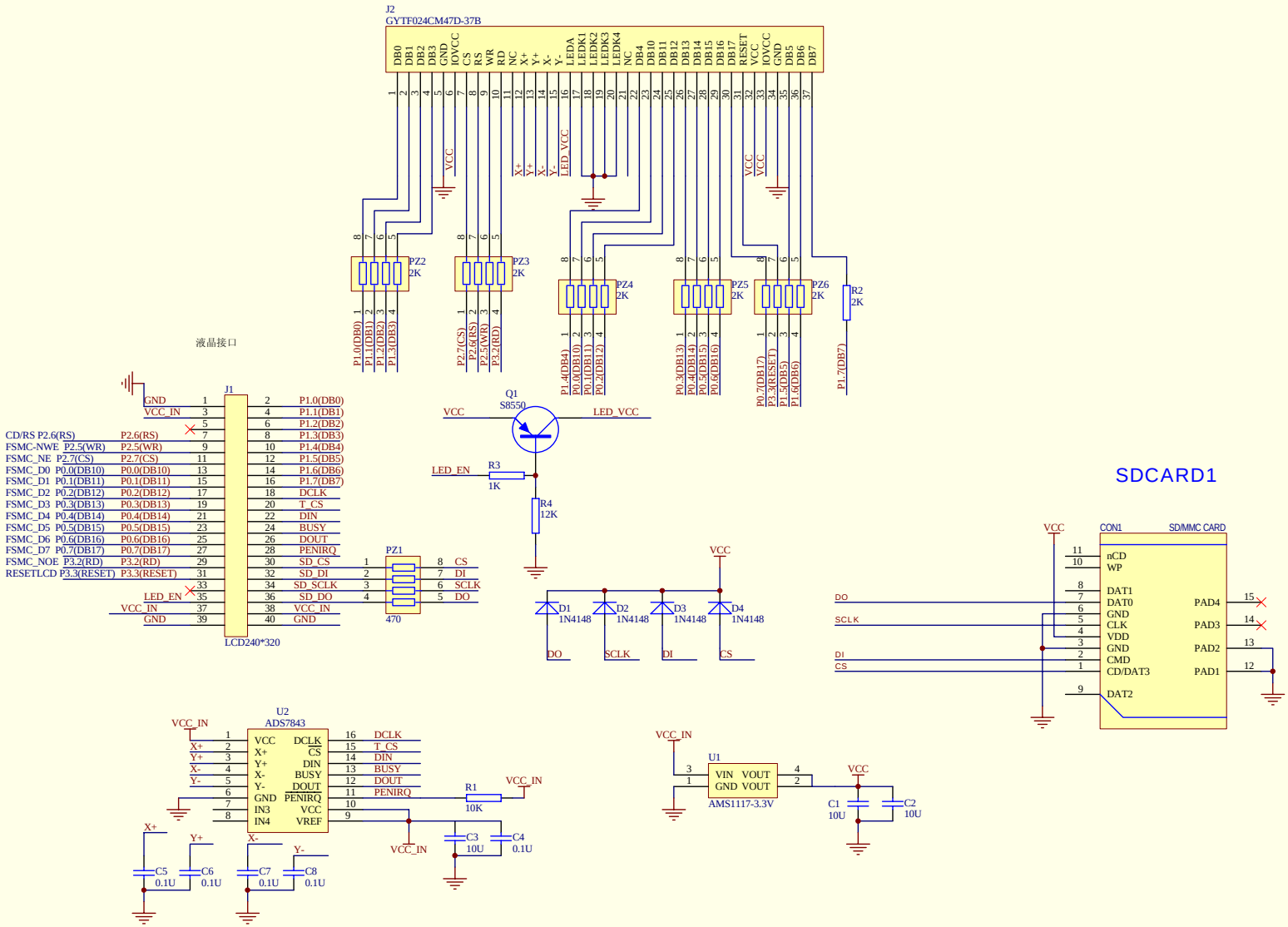
J2
GYTF024CM47D-37B
DB0 DB1 DB2 DB3 GND IOVCC CS RS WR RD NC X+ Y+ X- Y- LEDA LEDK1 LEDK2 LEDK3 LEDK4 NC DB4 DB10 DB11 DB12 DB13 DB14 DB15 DB16 DB17 RESET VCC IOVCC GND DB5 DB6 DB7
VCC
X+ Y+ X- Y-
LED_VCC
VCC VCC
PZ2 2K
PZ3 2K
PZ4 2K
PZ5 2K
PZ6 2K
R2 2K
P1.0(DB0) P1.1(DB1) P1.2(DB2) P1.3(DB3)
P2.7(CS) P2.6(RS) P2.5(WR) P3.2(RD)
P1.4(DB4) P0.0(DB10) P0.1(DB11) P0.2(DB12)
P0.3(DB13) P0.4(DB14) P0.5(DB15) P0.6(DB16)
P0.7(DB17) P3.3(RESET) P1.5(DB5) P1.6(DB6)
P1.7(DB7)
液晶接口
J1
GND
VCC_IN
CD/RS P2.6(RS)
FSMC-NWE P2.5(WR)
FSMC_NE P2.7(CS)
FSMC_D0 P0.0(DB10)
FSMC_D1 P0.1(DB11)
FSMC_D2 P0.2(DB12)
FSMC_D3 P0.3(DB13)
FSMC_D4 P0.4(DB14)
FSMC_D5 P0.5(DB15)
FSMC_D6 P0.6(DB16)
FSMC_D7 P0.7(DB17)
FSMC_NOE P3.2(RD)
RESETLCD P3.3(RESET)
LED_EN
VCC_IN
GND
P1.0(DB0) P1.1(DB1) P1.2(DB2) P1.3(DB3) P1.4(DB4) P1.5(DB5) P1.6(DB6) P1.7(DB7)
DCLK T_CS DIN BUSY DOUT PENIRQ SD_CS SD_DI SD_SCLK SD_DO VCC_IN GND
LCD240*320
PZ1
CS DI SCLK DO
470
Q1
S8550
VCC
LED_VCC
LED_EN
R3 1K
R4 12K
D1 1N4148
D2 1N4148
D3 1N4148
D4 1N4148
DO SCLK DI CS
SDCARD1
CON1
SD/MMC CARD
nCD
WP
DAT1
DAT0
GND
CLK
VDD
GND
CMD
CD/DAT3
DAT2
PAD4 PAD3 PAD2 PAD1
DO SCLK DI CS
U2
ADS7843
VCC_IN
X+ Y+ X- Y-
VCC X+ Y+ X- Y- GND IN3 IN4
DCLK CS DIN BUSY DOUT PENIRQ VCC VREF
R1 10K
C3 10U
C4 0.1U
C5 0.1U
C6 0.1U
C7 0.1U
C8 0.1U
U1
AMS1117-3.3V
VIN VOUT GND VOUT
C1 10U
C2 10U